ДИОДНЫЕ ЛАЗЕРЫ С ВОЛОКОННЫМ ВЫХОДОМ BWT Beijing Ltd

ТЕХНИЧЕСКАЯ ИНФОРМАЦИЯ

www.lasercomponents.ru
+7 (495) 269-40-22

Юридический адрес:
117105, г. Москва, Варшавское шоссе, д. 1,
стр. 17, этаж 2, комн. 1
т/ф: +7 (495) 269-40-22
www.lasercomponents.ru

520nm 5mW Coaxial Packaged SM Diode Laser

K520F03RN-0.005W（Standard Product）

Features :

- 520nm wavelength
- 5mW output power
- 4μm fiber core diameter
- 0.13N.A.

Applications :

- Aiming Beam

BWT Beijing's high power diode laser modules are manufactured by adopting specialized fiber-coupling techniques, resulting in volume products with a high efficiency, stability and superior beam quality. The products are achieved by transforming the asymmetric radiation from the laser diode chip into an output fiber with small core diameter by using special micro optics. Inspecting and burn-in procedures in every aspect come to a result to guarantee each product with the reliability, stability and long lifetime.

Our research staffs are constantly improving and innovating the processing technology in the producing process, based on the professional knowledge and experience accumulated in long-terms. We are also continuously developing new products to meet customers' specific needs.

At BWT Beijing, to provide high quality products with reasonable price is our always goal.

Юридический адрес:
117105, г. Москва, Варшавское шоссе, д. 1,
стр. 17, этаж 2, комн. 1
т/ф: +7 (495) 269-40-22
www.lasercomponents.ru

520nm 5mW Coaxial Packaged SM Diode Laser

K520F03RN-0.005W（Standard Product）

Specifications (25℃)		Symbol	Unit	K520F03RN-0.005W		
				Minimum	Typical	Maximum
Parameter(1)	CW Output Power	P_O	mW	5	-	-
	Threshold current	I_{th}	mA	-	50	-
	Operating current	I_{op}	mA	-	150	160
	Operating voltage	V_{op}	V	-	7.3	8
	Reverse Voltage	V_{re}	V	-	2	-
	Slope Efficiency	η	W/A	-	0.25	-
	Electrical-to-Optical Efficiency	PE	%	0.1	-	-
	Center wavelength(2)	λ_c	nm	510	-	530
	Spectral width(FWHM)	$\Delta\lambda$	nm	-	-	3
	Wavelength Shift with Temperature	-	nm/℃	-	0.2	-
Fiber Data	Buffer diameter	D_{buf}	μm	-	250	-
	Cladding diameter	D_{clad}	μm	-	125	-
	Core diameter	D_{core}	μm	-	4	-
	Numeric aperture	NA	NA	-	0.13	-
	Fiber length(3)	lc	m	0.9	1	1.1
	connector	-	-	FC/FA/SC/SA/SMA905/ST		
	Fiber Bend Radius		mm	-	40	-
Others	ESD	-	V	-	-	500
	Storage temperature	-	℃	-20	-	70
	Lead Soldering Temp	Tis	℃	-	-	260
	Lead Soldering Time	Tis	sec	-	-	10
	Operating case temperature	Top	℃	15	-	35
	Relative Humidity	-	%	15	-	75

(1) Data measured under operation output at 2mW.
(2) For other wavelength (650nm/ 660nm), please contact with BWT.
(3) Other fibers available upon request.

Юридический адрес:
117105, г. Москва, Варшавское шоссе, д. 1,
стр. 17, этаж 2, комн. 1
т/ф: +7 (495) 269-40-22
www.lasercomponents.ru

520nm 5mW Coaxial Packaged SM Diode Laser

K520F03RN-0.005W（Standard Product）

Package Dimensions (mm)

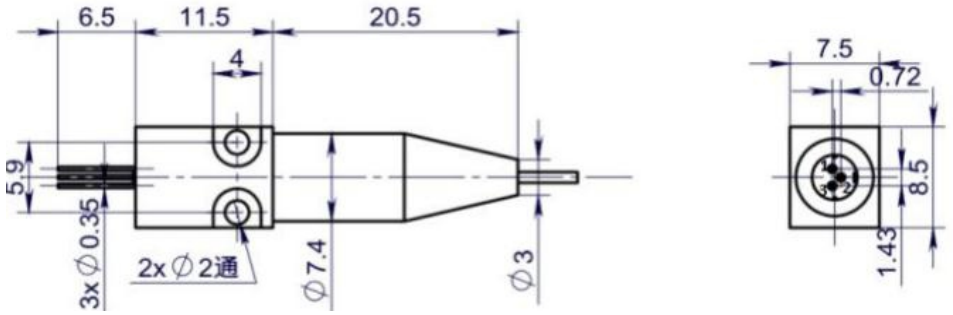

Pin	Function
1	LD (+)
2	Case
3	LD (-)

OPERATING NOTES

- ◆ Avoid eye exposure to direct or scattered radiation.
- ◆ ESD precautions must be taken.
- ◆ Please connect pins to wires by solder instead of using socket when operation current is higher than 6A.
- ◆ Soldering point should be close to the root of the pins. Soldering temperature should be lower than 260℃ and time shorter than 3 second.
- ◆ Use constant current power supply. Avoid surge current.
- ◆ Laser diode must be used according to the specifications.
- ◆ Laser diode must work with good cooling.
- ◆ A minimum bend radius should be 300 times greater than the fiber cladding diameter.
- ◆ Operation temperature is 15℃~ 35℃.
- ◆ Storage: -20℃~ +70℃, all pins short-circuit.

www.lasercomponents.ru
+7 (495) 269-40-22
117105, г. Москва,
Варшавское шоссе, д.1, стр. 17
office@lasercomponents.ru